5.2 Humbuckers

The interference occurring with single-coil pickups motivated the development of the Humbucker. Single-coil pickups do not only pickup the vibration of the strings and generate a corresponding electric voltage, but they are also sensitive to magnetic fields as they are radiated by transformers, fluorescent lamps, or mains cables. Instead of having one coil, the "Hum-Bucker" consists of **two coils** connected to form a dipole and wired such that they are out of phase. The magnetic field generated by external interference sources induces in each coil the same voltage. Because of the **anti-phase connection** of the two coils the voltages cancel each other out. If the field generated by the permanent magnet would also flow through both coils with the same polarity, the signals generated by the vibrating string also be cancelled – this of course must not happen. For this reason the permanent field flows through the two coils in an anti-parallel manner such that the voltages induced by the vibrating strings are out of phase. Because the coils are connected out of phase, the voltages are turned twice by 180° i.e. they are again in phase (180° +180° = 360° corresp. to 0°). With this arrangement the signal-to-noise ratio can be improved somewhat compared to single-coil pickups (chapter 5.7).

As early as the 1930s designers sought to develop a marketable pickup based on compensation principles which were generally already known. **Seth Lover**, technician with the guitar manufacturer **Gibson**, achieved the commercial break-through. He is the designer of the Gibson Humbucker, but he's not the inventor of the humbucking principle as he himself noted: "People had been working on double coil pickups since the 1930s [13]". Lover's patent application from 1955 cites a further seven earlier patents for pickups considered in the procedure which also already had been referring to the compensatory principle. Lover was thus not the first but he succeeded together with Gibson in creating a commercially highly successful, even "mythical", pickup which in this respect far surpassed e.g. the **Gretsch** humbucker appearing almost at the same time (FilterTron pickup developed by Ray Butts).

Gibson applied for a patent for their humbucker in 1955. The patent was granted in 1959, however already in 1957 Gibson guitars fitted with humbuckers appeared on the market. Up to the granting of the patent the pickups sported the sticker "Patent Applied For". This led to the abbreviation **PAF**-pickup. In 1962 the PAF sticker was changed: instead of "Patent Applied For" now the patent number 2.737.842 could be read. The correct number of the "Humbucking"-patent from 1959 was however 2.896.491. Allegedly, the misleading number was deliberately printed on the sticker to fool competitors. Or so says Seth Lover.

The humbucker uses two coils instead of one with the objective that hum voltages are superimposed out of phase and thus cancelled while the voltages derived from the moving string are added in phase and thus amplified. Single-coil and humbucking pickups differ not only in the interference voltages they pickup. Their different construction results also in different transfer functions in i.e. a different sound. Musicians often express the opinion that single-coils are softer but have more treble while humbuckers are louder but sound darker. This may have been a reasonable assessment correct statement regarding the early guitars of Fender and Gibson, however this prejudice is not suitable as dogma. The pickups of a Fender Telecaster and those of a Les Paul differ not only in the number of the coils but also in the pickup's inductivity, resonance frequency, and resonance dampening. The following sections explain how the pickup parameters influence the magneto-electric transmission, and how this determines the sound

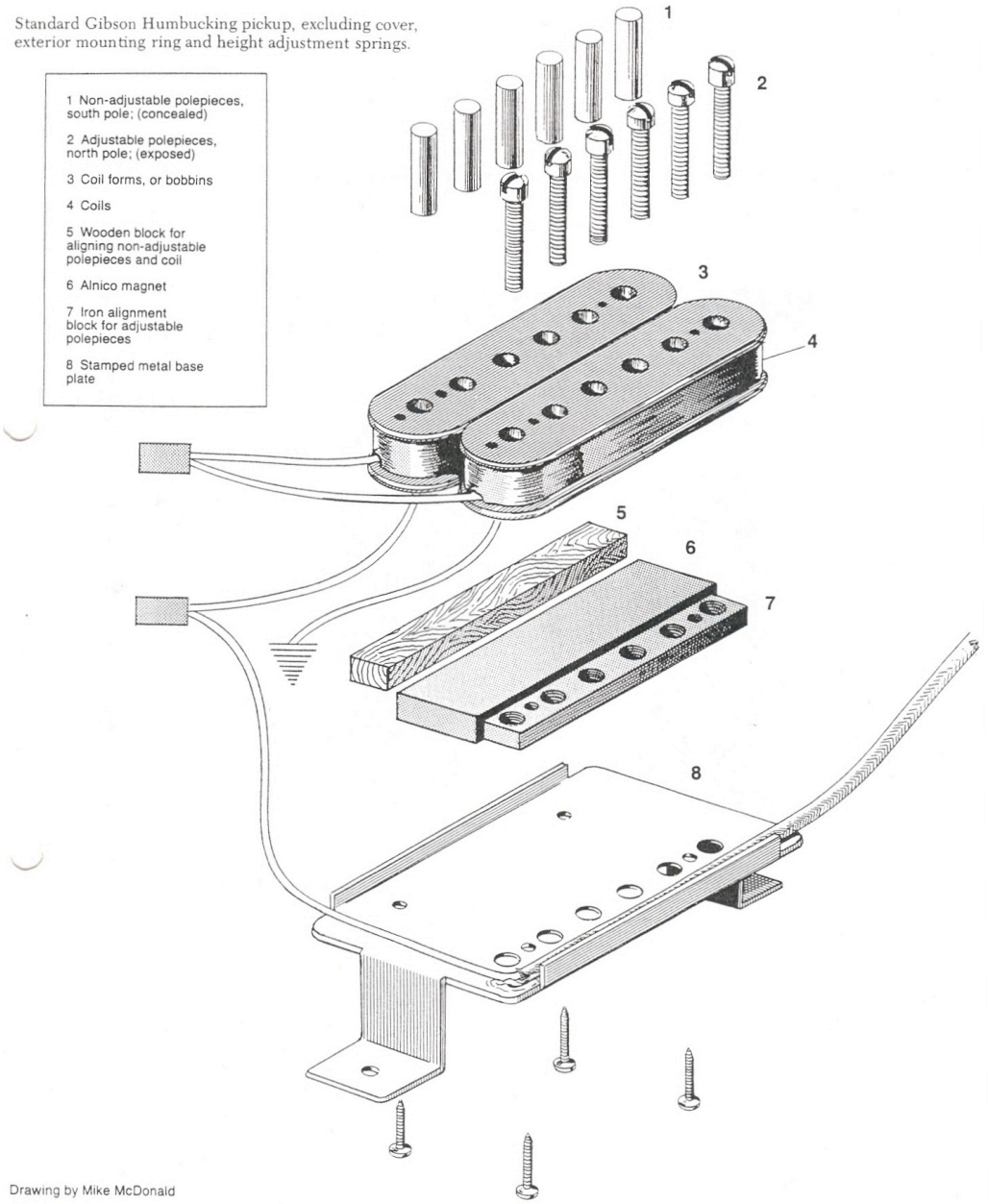

Fig. 5.2.1: Gibson-Humbucker [drawing: Mike McDonald].

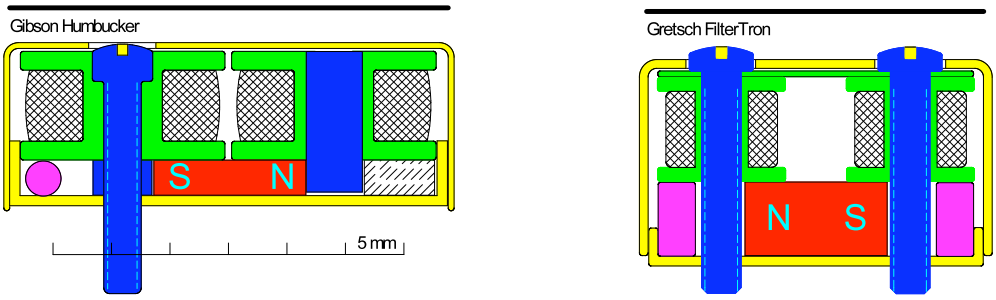

Fig. 5.2.2: Cross section of Humbucker. Gibson Type 490 (left), Gretsch FilterTron (right).

Fig. 5.2.1 shows the construction of a Gibson-Humbucker. Mounted on a base-plate (8) we find a wooden strip (5) serving as spacer, an alnico bar-magnet (6), and a metal block (7) with multiple bores. Placed above this are the two bobbins (3) with their coil windings, fixed with two screws. One of the bobbins carries 6 cylindrical metal pins (1) which are often called slugs, the other 6 metal screws (2). The cross-section shown in **Fig. 5.2.2** describes the magnetic flux: the bar-shaped permanent magnet is polarized horizontally and causes a circular flux flowing – from the north pole – through the pin (slug) and returning through string, screw and metal block to the south pole. Only a small part of the overall magnetic flux runs through the string while most of it circles back through air as flux leakage. In Gibson's patent publication two similar coils with pins are shown. The production version included the two different coils, with the second one carrying the screws for adjusting the volume of individual strings. The FilterTron pickup installed in Gretsch guitars uses a similar construction principle. With its two rows of screws it achieves full mirror symmetry and thus a better hum suppression. Both humbuckers shown in Fig. 5.2.2 are sealed with a metal cover.

In the Gibson Humbucker, an **alnico magnet** generates the permanent field. Without it the pickup would not work. However, the influence of the specific magnetic material must not be overestimated: the alternating magnetic field (which exclusively induces the voltage in the coils) oscillates predominantly in the vicinity of the string; only a very small part reaches the magnet (chapter 5.4.3). We have a similar situation for the magnetic field generated by a current flowing in the coil and determining the inductivity: measuring the pickup resonance with and without magnet show merely a 3% difference in the inductivity (chapter 5.9.2.6) which is negligible compared to other parameter variations. Whether a strong or a weak magnet is incorporated will have slight effects on the sound, but a significant change is to be expected only in the loudness. Regarding the question which magnetic material was (or is) in fact used one finds comprehensive answers in literature. Not to mention the Internet! "You have many more hits than there are magnetic materials!" BINGO!

"Up to 1950, there was no commitment to a specific alnico material at Gibson, and Alnico 2, 4, 5, and 8 were installed depending on availability and presumably also on most favorable purchase cost. From 1950 (...) Alnico 5 prevailed as predominantly used magnet material. Which however does not mean that it stayed that way. Even towards the end of the 1950's humbucker specimen with by all appearances other Alnico magnets do surface [Day et al.]". "The magnets in Burst-PAFs were made of **Alnico II and IV** [VG Magazine]". "This pickup (SH-55) was re-introduced by Seymour Duncan using the specifications of PAF-inventor Seth Lover to 100%: **Alnico-2** magnets" [Musik Produktiv catalogue]. "The SH-55 is really faithful to the original, it will have my stamp of approval on it [Seth Lover in VG Magazine]". We also used **Alnico II and III**, and the reason is, that you couldn't always buy **Alnico V**, but whatever was available we would buy as they were all good magnets [the same Seth Lover in the book *The Gibson*]".

So there we have it: most probably anything that couldn't climb a tree fast enough was installed by Gibson in their pickups. Add two coils with 4500 turns each ... or more .... or less. Then: slap on the cover and – most importantly from today's point of view – stick that PAF-sticker to the bottom. Done. Today it'll cost ya $3000.- per piece. That's per piece pickup, not per piece guitar! Occasionally that could rise to $10000.-. Trend: upwards. But then ... Rembrandt's legacy is not evaluated based on the cost of paint and canvas he incurred back then, either.

The screws and pins (i.e the pole-pieces) focus the field and sample the vibrations of each string in two sectors which are separated by about 19 mm. In particular for the bass-strings of the guitar a loss in brilliance results, which however is not generally undesired in particular for distorted sound (chapter 5.10.5). To counter the treble loss – which is due to interference effects – the distance between the poles needs to be reduced to a few millimeters. At the same times, this allows for mounting the humbucker (now reduced in size) into a housing foreseen for single-coil pickups – it will now fit into the single-coil-routing in the guitar body. **Fig. 5.2.3** shows an in-scale comparison between a Gibson Humbucker (here a special version with 3 magnets) and a DiMarzio-Humbucker. The latter employs 2 1,6-mm-strong iron blades of 6 cm length, which run at a distance of 7,5 mm across the strings. Instead of screws and pins, narrow blade-shaped pole-pieces were used very early on by Willi Lorenz Stich, alias Bela Lorentowsky, alias Billy Lorento, alias **Bill Lawrence**, they later show up in Joe-Barden-pickups, and by now they are also offered by Seymour Duncan and DiMarzio – an the are rejected rigorously by many guitarists just because of their look.

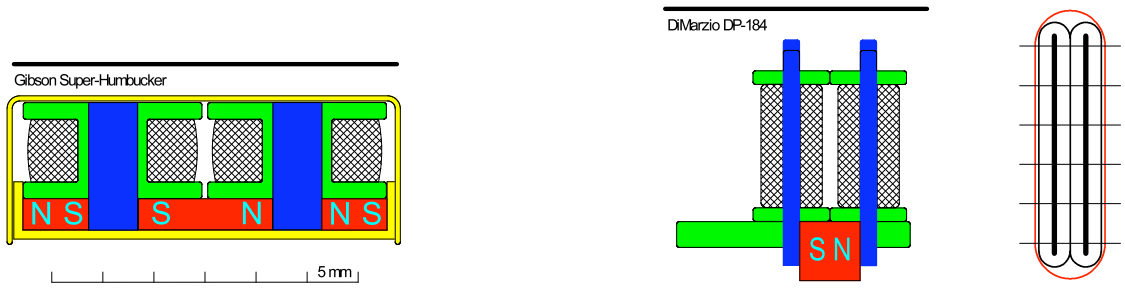

Fig. 5.2.3: Gibson 'Super'-Humbucker [acc. to Lemme] with 3 magnets, und DiMarzio-Humbucker with two metal blades. The Super-Humbucker installed in the L6-S had coaxial coils, however [Billlawrence.com].

Different construction of the two coils (**Fig. 5.2.4)** influences in particular inductivity and Q-factor. Humbuckers with identically constructed coils target a broad-band cancellation of the interference. Differences in shape and/or material of pole-pieces, wire diameter and/or number of turns allow for limiting the cancellation to specific frequency ranges (usually the lower frequencies), and for modification of the transfer function in the remaining frequency range. The typical humbucker interference notch (chapter 2.8.3) can be shifted or reduced in this manner. The exact calculation of the transfer behavior gets complicated since the coils are magnetically (and in some cases to a non-negligible degree even capacitively) coupled. This coupling needs to be considered also if only one of the coils of a humbucker is connected (**humbucker in single-coil mode**, split operation). The magnetic poles (or the pole-pieces) of the unused coil still generate an alternating magnetic field which partially flows through the used coil and induces a voltage there.

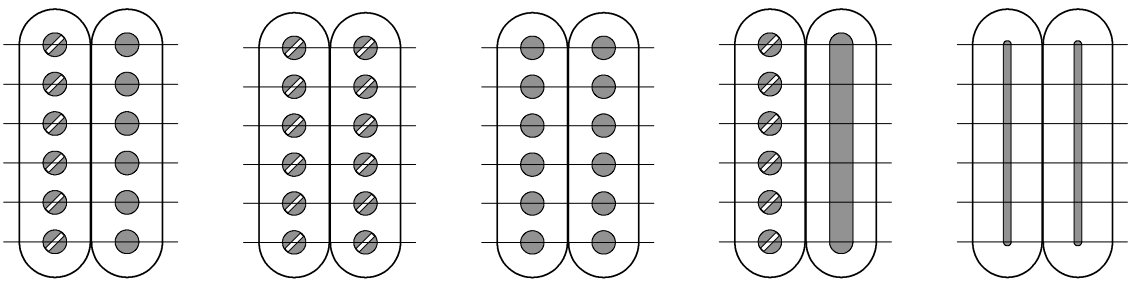

Fig. 5.2.4: Various humbucker construction types.