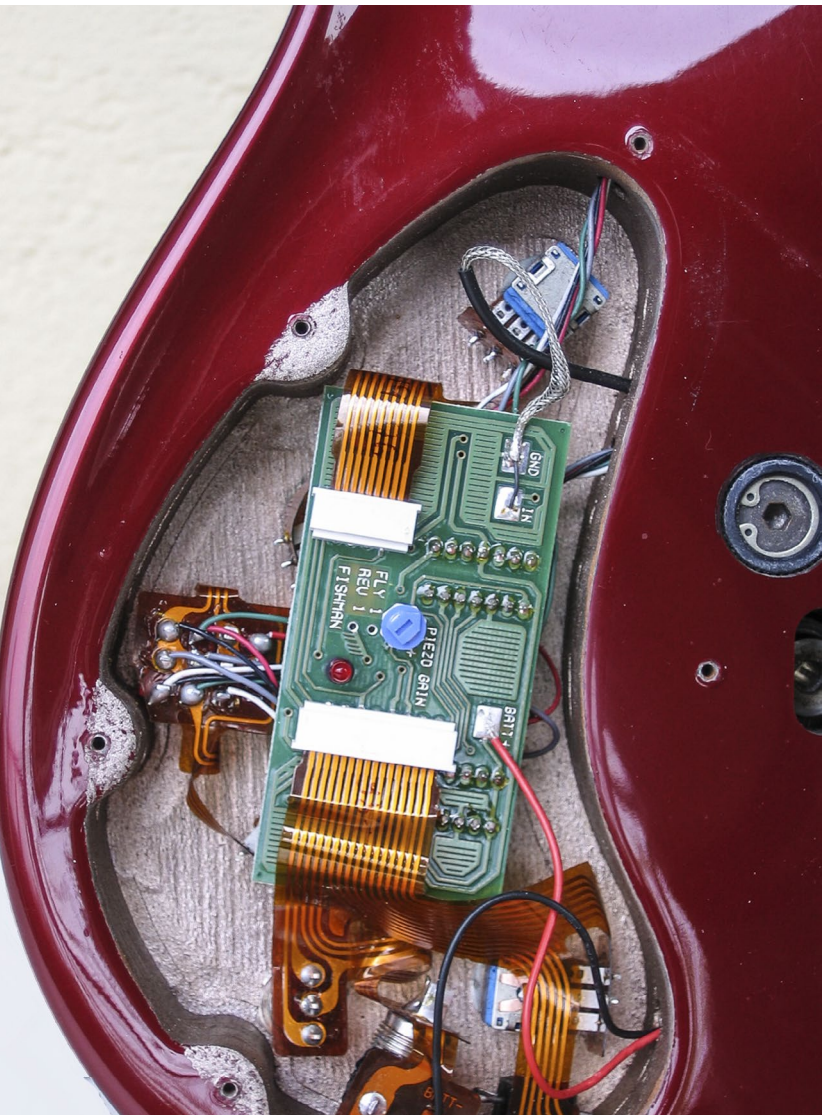

Fig. 1: Industrial quality inside a Parker guitar.

WHO'S AFRAID OF ACTIVE GUITARS?

Dying batteries, hum, high cost, and several other myths are dispelled in this in-depth look at active guitar electronics

BY **HELMUTH LEMME**

Active electronic circuits are installed in almost all the better electric basses today. These allow a much wider-ranging sound control than passive ones: separate controls for bass and treble, and often for the midrange too, as well as continuous blending of two pickups. If you want a 'slap-sound', where the string hits the frets, then an active circuit is obviously better. Another advantage is that the tone colour does not depend on the setting of the volume pot. You can lower the volume without treble loss and can use very long cables.

Fig. 2: *Vox "Starstream" with a lot of different electronic effects, even a tuner (if you turn the magazine around, you might be able to read the control panel).*

Active electronics are usually powered by a single 9-V battery, but in rare cases two batteries are required, or even an external power supply.

But what about *guitars* with active electronics? These are less popular. Many guitarists do not want them. They say it ruins the sound. Is this really true?

It was true in the old days. The developers of the circuits were not electronics experts. Many of them were amateur tinkerers, and the results were poor. The story of active circuits is an old one. In the fifties the German company Hoyer built a tube amplifier and a loudspeaker into a full-body jazz guitar. Apparently only three units were built and it is thought they did not sound very good because of problems with feedback. In the sixties, when the first useable transistors came onto the market (still of germanium), the first battery-driven active circuits appeared. One of the first was installed into a semi-acoustic Hofner 4570 guitar (**fig. 1**, *in the previous page*) and I was able to take a look at it when it was brought to me for repair. It used an OC71 transistor powered by a 3V battery. Presumably it was intended to make the signal louder. It was, however, more of a fuzz unit than a preamp and it sounded terrible. More active circuits by the same company appeared in the seventies and some were introduced by Framus, Vox (**fig. 2**, *above*) and other companies. Some of these included preamps, sound filters, wah-wahs, and even an octave divider. Because the schematics were very simple, they did not sound very good and soon disappeared. Musicians preferred external effect units.

Probably the first company to install active circuits of high professional quality was Alembic. At first they produced only basses, but later made guitars as well - all high quality, but in limited quantities and expensive.

In 1977, some models by Gibson reached higher sales figures. The 'RD77 Artist' guitar (**fig. 3**, *on the right*) and a matching bass model came first. The circuit consisted of active tone controls (bass and treble), an additional treble booster, a compressor and an expander. The compressor attenuates loud tones and amplifies soft ones for improved sustain. It worked very well and produced long extended tones. The expander does the opposite, shortening the sustain. This did not work as convincingly. In 1979 the wiring was improved a little and some other models also were equipped with it: "Les Paul Artist", "ES Artist" (**fig. 4**, *next page, top*), "SG Artist", and "Sonex Artist".

But all these guitars sounded considerably different from the base models even if the effects were turned off. The warmth of the passive pickups was missing. They sounded rather brittle and cold because at that time the circuit engineers still had not understood the actual operation of the pickups correctly. The predominant opinion among guitarists was that "this and that pickup sounds like this and that", but his is not entirely correct. The pickup alone is not responsible for the sound: external electrical load also plays an essential role. This is primarily the guitar cable, which has a certain capacitance and influences the sound. Changing your cable can change your sound. This may sound crazy but is true. The inductance of the pickup and the capacitance of the cable form a resonating circuit that is an integral system that must not be split up into parts. In the old active circuits the pickups worked without a capacitive load so they delivered a completely different sound. Many guitarists did not like this and so those active circuits got a bad reputation. To simulate the cable,

Fig. 3. **Gibson "RD77 Artist" with built-in compressor and expander.**

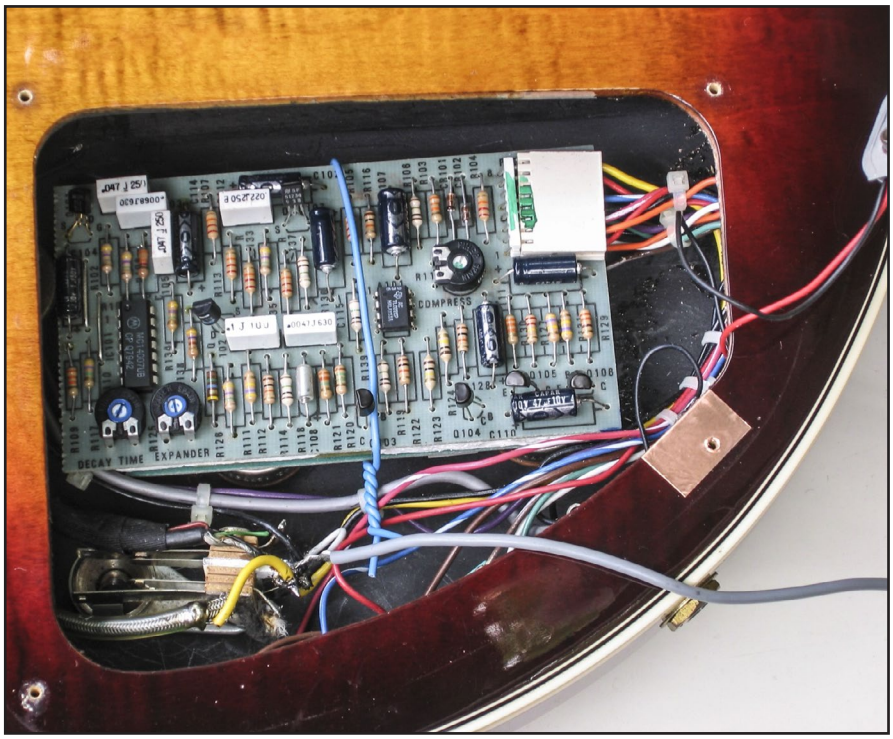

***Fig. 4.** Interior of a Gibson "ES Artist"*

Another company which started installing active circuits back in the seventies was Ovation. Their acoustic guitars with fibreglass bodies have piezo pickups in the bridge. There were some other models with simple passive electronics but they don't work very well. The treble quickly disappears when you turn the volume down, and noise interference increases. With the active circuit on, the tone quality is considerably better. Hardly any manufacturer of electro-acoustic guitars uses passive wiring today.

I have soldered capacitors parallel to the pickups on several Gibson Artist series guitars that have come through my workshop. The sound got much warmer, more like a Gibson sound.

Later, electric guitars combined both magnetic

The 80s saw the introduction of improved active circuits remedying the problem: a suitable capacitor is installed here parallel to the input, e.g. 330pF, 470pF or 680pF, creating the correct working conditions for the pickup. Fender introduced the guitar models named "Elite Stratocaster", "Eric Clapton Stratocaster", and "Richie Sambora Stratocaster", all of which have a mid boost that makes the tone fatter for overdriving an amp. (The figure of 25dB usually associated with them is not actually correct. The boost is in fact 8dB.) The board is shown in **fig. 5** (*below*). It needs an extra routing in the body.

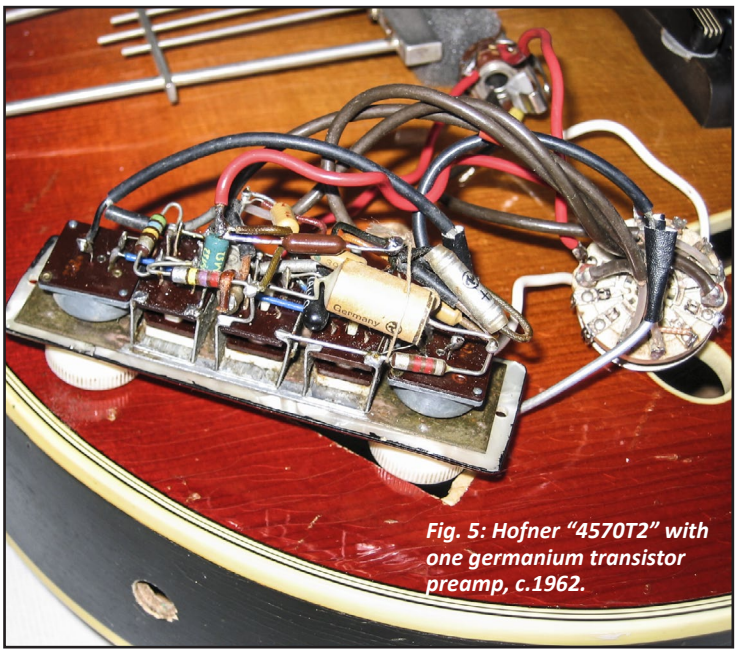

***Fig. 5:** Hofner "4570T2" with one germanium transistor preamp, c.1962.*

and piezoelectric pickups. In principle, you can do this passively but only as a makeshift solution. With an active circuit it works much better. You can mix both very precisely and if you adjust the volume the tone doesn't change. The first guitars of this type were introduced by Parker (**fig. 6**, below) and Godin (**fig. 7**, opposing page). Many others followed.

Different kind of active circuits

The simplest of all circuits is a so-called impedance converter. It does not amplify the sound signal but separates the capacitance of the guitar cable from the pickup. It has a high input resistance and a low output resistance which increases the pickup's resonance super-elevation and consequently the expressiveness of the sound. If you put different capacitors in parallel to the pickup, you can vary its resonance frequency and thus the tone colour within broad limits. A rotary switch with several capacitors is very practical, a so-called "C-Switch". It can replace the standard tone pot so that there is no need to drill an additional hole.

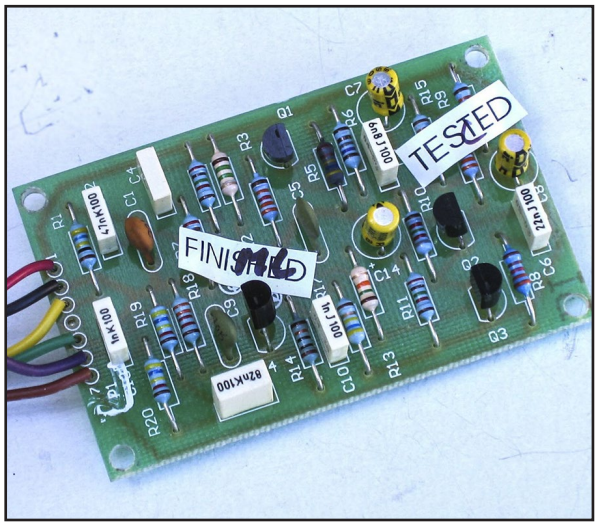

Fig. 6: Circuit board of the Fender Mid Boost.

A preamplifier offers the same advantages but also makes the sound signal much louder—a useful feature if you have pickups which deliver a weak output signal. With a preamp you can even drive the amp further into distortion. With a 9V supply a sensible amplification factor usually ranges from 2-fold to 6-fold. With higher gain there is danger of distortion in the preamp, which as we noted before, can sound very unpleasant and should be avoided. Distortion should happen only in the guitar amplifier itself. With a higher gain preamp, distortion can be avoided by increasing the supply voltage to 18V, but you would need two batteries—a solution only possible if there is enough space in the guitar.

Another type of active circuit has active tone controls: separate regulators for bass and treble, and sometimes midrange (usually found in basses, as noted above). These circuits are seldom used in guitars. One exception is the Gibson Artist series I mentioned earlier. Not many guitarists are convinced that this equalization method offers ay benefits.

However, there is yet another kind of sound control which has a considerably better effect. This is called a second order low-pass filter with adjustable resonant frequency and resonance super-elevation. In technical jargon this is a "State Variable Filter". With its adjustable transfer characteristic it can electronically simulate many different pickups providing a wide variety of tone colours. This type of circuit was first used by Alembic and then later by others, for example in guitars by Aria or basses by Wal. Versions which can be installed on guitars and basses are available from the author.

Sustainers, on the other hand, are very special things. These are little amplifiers that drive an electromagnet which excites the strings in the rhythm of their own vibration, stimulating them to vibrate more strongly. It produces feedback

All Photos by H. Lemme

Fig. 7: A Godin with mixable piezo and magnetic pickups.

even at low volume. These circuits consume high current so an external power supply makes more sense than a battery. Manufacturers gave up building effects like distortion, wah-wah, phaser, flanger and echo, into guitars because musicians preferred separate boxes on the ground.

Active pickups

As I said before, it is useful to use a preamp to overdrive an amplifier more strongly. To simplify assembly, some manufacturers have installed the preamp into the pickup directly. These are called "active" pickups. They have an additional red wire apart from the normal output cable to which a 9-V battery is attached. A well-known manufacturer is EMG. Because of this preamplifier, active pickups have a completely different transfer characteristic o to passive pickups. They do not have any resonance. Treble and bass are attenuated while the middle frequencies are emphasised. This is not very favourable for clean sounds but is excellent for overdriven sounds. The trick with capacitors connected in parallel to the pickup coil does not work here as the connection between the coil and the preamp input is not accessible. Their characteristic is fixed and can't be changed by simple means. The only way is to connect a 'State Variable Filter' at the output.

Common arguments against active electronics

Anyone who dares to suggest that active guitars are superior to passive ones will often meet with disapproval because a reflexive distrust of this technology persists. Despite all the advantages of active electronics many guitarists are still very sceptical. There are some real problems, admittedly, but most are just myths. Let's review them.

"The battery could go flat in the middle of a performance"

Certainly this is true. So you need to have a spare battery in your guitar case, just like you need spare strings. Cheap batteries are not recommended because these don't retain their charge for a long time—they can get flat just by lying around. Alkali manganese batteries are the best; they do not only last much longer but stay fresh for a long time when not used.

However, batteries don't suddenly go flat - they become gradually weaker and weaker. You'll notice a dying battery when hard strummed tones begin

to distort and softer strummed tones stay clean. So there still is some warning in advance, unlike a string which breaks without warning. You also can install a by-pass switch in parallel to the active circuit allowing you to continue playing in passive mode.

Batteries sometimes start producing a crashing noise when they're almost flat. The reason is that the inner contacts have rusted loose. In these instances, don't blame the active circuit, replace the battery!

Rechargeable batteries are not worth using in a guitars because of the low current consumption of the circuits. They fall much faster from full voltage down to zero than non-rechargeable batteries, giving less warning time. A power supply is not worth using either, unless the instrument has a sustainer or LEDs built into the neck.

"The battery clip can come loose and the guitar would stop working"

This problem is well known but easy to solve. Carry some small pliers in your guitar case for bending the clip into the right form. They can be very useful for changing strings, too.

"The battery can leak and damage the guitar"

This only happens with very low quality batteries. Good ones never leak.

"Active electronics produce noise"

This was only a problem with very early attempts at producing actve circuitry, but as designers' experience and the technology improved the problem was eliminated. With industry-quality components this is definitely no longer a problem.

"Active electronics produce hum"

This is not true. If a guitar is humming, it is never due to the electronics. Either the pickups are single-coils, or the cavity is not correctly shielded. Many guitars use conductive paint, not always with good results. Metal foil is much better by far. Aluminium foil is cheap and easy to obtain, but it cannot be soldered--it must be kept in contact with the pots. Copper foil is expensive but it is solderable. Copper containing spray paint (such as 'EMV 35') is not as good as copper foil, but it's still better than graphite spray. Cables with leaky shielding can also cause hum, but in this case active electronics would attenuate the effect rather than increase it.

"Electronics change the sound"

This can happen. But this does not mean that the sound will automatically be worse. If this is the case, it means the circuit was not well designed, or not correctly adapted to the pickups. The electrical load of the pickup is wrong. We saw that old active circuits had no load capacitance at their input, so the pickup had a very high resonance frequency, and the sound got too thin and brittle. With the right load the sound will be corrected. A skillful choice of components will create a better sound than a conventional passive circuit can offer. The fundamental sound of every guitar is produced by the wood and the strings. This of course will remain the same, but that fundamental signal is susceptible of being transferred more expressively. All pickups change the sound, anyway; the signal they put out does not exactly correspond to the vibration of the strings—it will always be corrupted in a certain way. This alteration is highly prized by guitarists: a neutral transfer would sound boring. Every type of pickup transfers differently, as it is of course intended by their design. So, why not "modify" the sound in another way? What counts

is the final result. With the suitable load capacitors and resistors the sound can be trimmed to your personal taste from a wide range of tonal options.

"Electronics uses transistors which cause inharmonious distortions"

If this happens, either the circuit was built amateurishly or the battery is nearly flat. Transistors produce inharmonious distortions only when an amp is overdriven. This can be easily avoided by not setting the gain too high. In a correctly designed circuit the signal transferred will be crystal clear. Even tube gurus Mesa Boogie use transistors in their amplifiers - in the graphic equalizer. Because hardly anyone knows this, nobody seems to notice.

"Electronic circuits are expensive"

That's not true. Even high-quality components cost only a few cents today. In most cases the circuit is much cheaper than a set of new pickups. You then can often leave the old pickups in and just add active electronics. They will do their job much better than ever. This is a very attractive option for exotic guitars whose pickups have a special size and cannot be easily replaced. If a custom active circuit is needed, the main cost factors are (1) the development of the circuit, a work in need of much expertise and care, and (2) the installation, which will often require a bespoke solution especially based on the requests of the musician.

"The guitar gets devalued"

This does not have to be so. If it sounds better than before, then its practical value is indeed increased.

Where possible, when I undertake this kind of job I install the electronics in a way that it doesn't require any woodwork. If the buyer insists on receiving the guitar in its original state, then you can undo everything and bring the instrument back to its factory state without leaving a trace.

Installation is quite simple, actually

A typical active circuit is not even as big as a matchbox; it fits in most guitars without a problem. **Fig. 8** (below) shows a replacement for the Fender mid booster, which can be installed in most guitars without extra routing.

Routing work on the wood or additional holes in the top are seldom necessary: you can implement additional switching functions with push-pull pots or with rotary switches (the above mentioned C-Switch, for example) placed in the hole used before for the tone pot. But, let's face it, not every guitar is a precious vintage item that demands its original state must be preserved. Even if you absolutely cannot avoid installing additional switches and pots (a rare situation) the necessary modifications can be done in an aesthetically pleasing way.

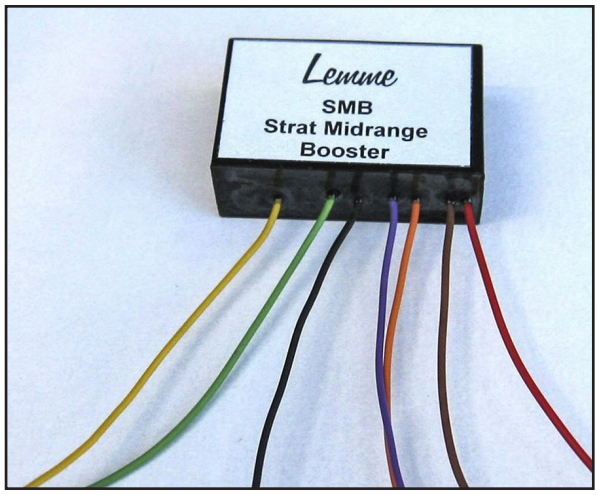

Fig. 8. Small as a matchbox, no milling necessary: replacement for the circuit shown in fig. 5

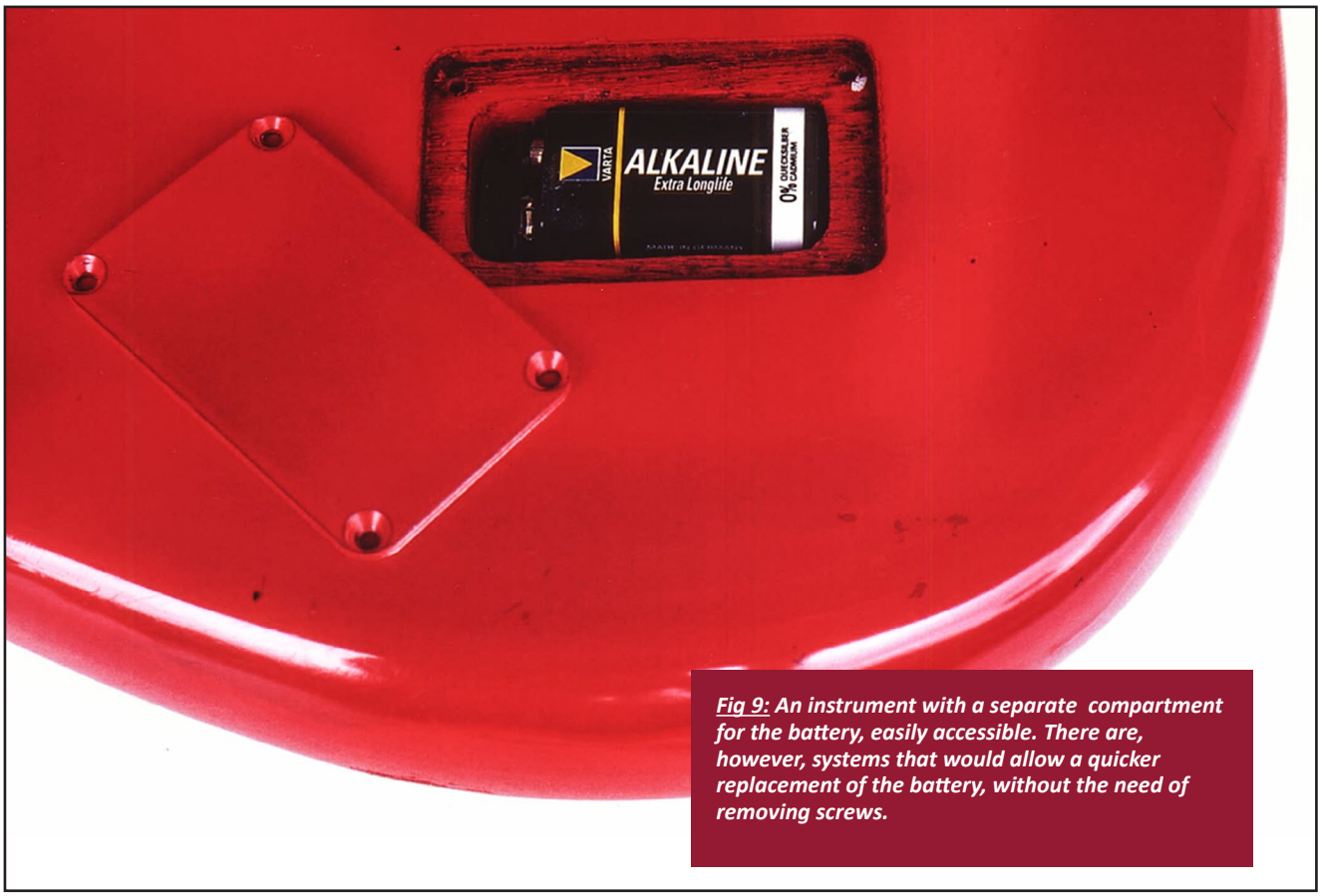

Fig 9: An instrument with a separate compartment for the battery, easily accessible. There are, however, systems that would allow a quicker replacement of the battery, without the need of removing screws.

It is very important that the battery is easily accessible and replaceable. You can find examples of guitars in which the batteries are badly installed-under a big pickguard, for example in a Stratocaster. This is really a crackpot idea. Anyone inexperienced would need half an hour to change the battery. A separate compartment is very important (fig. 9), and it must be easy to open. The fitting tool (coin or screwdriver) also must be carried in the guitar case. If you follows this advice, changing the battery should be quicker than changing a string.

Les Pauls have a cavity large enough for a battery. In my Stratocaster I put the battery into the jack cavity. An alternative place for the battery is the rear side, under the spring cover when the springs are hooked into positions 1, 2, and 5. In a Telecaster there is no space and thus some routing is necessary. A battery cavity can be routed under the pickguard (which can be easily removed), or on the back of the instrument. On hollow arch-top guitars such as an ES335 or ES175 three lithium button cells can be placed under the pickguard. Holders for them are available in the electronics trade.

Between the two extreme ideas “sound above all, no matter how looks like it” and “original appearance above all, no matter what it sounds like” a good compromise can always be found.

Additional information:
Author’s website: www.gitarrenelektronik.de
(in German language)